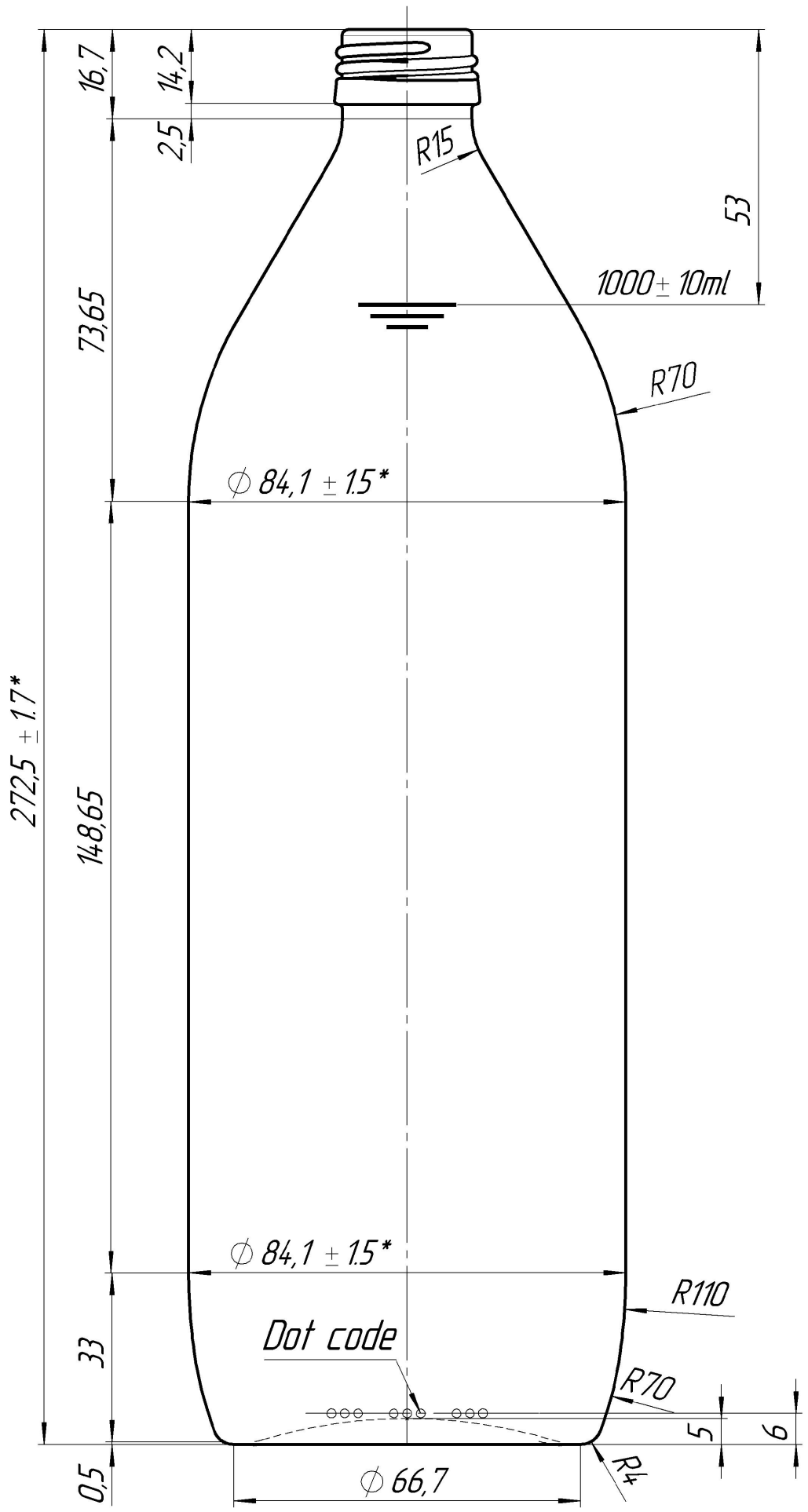

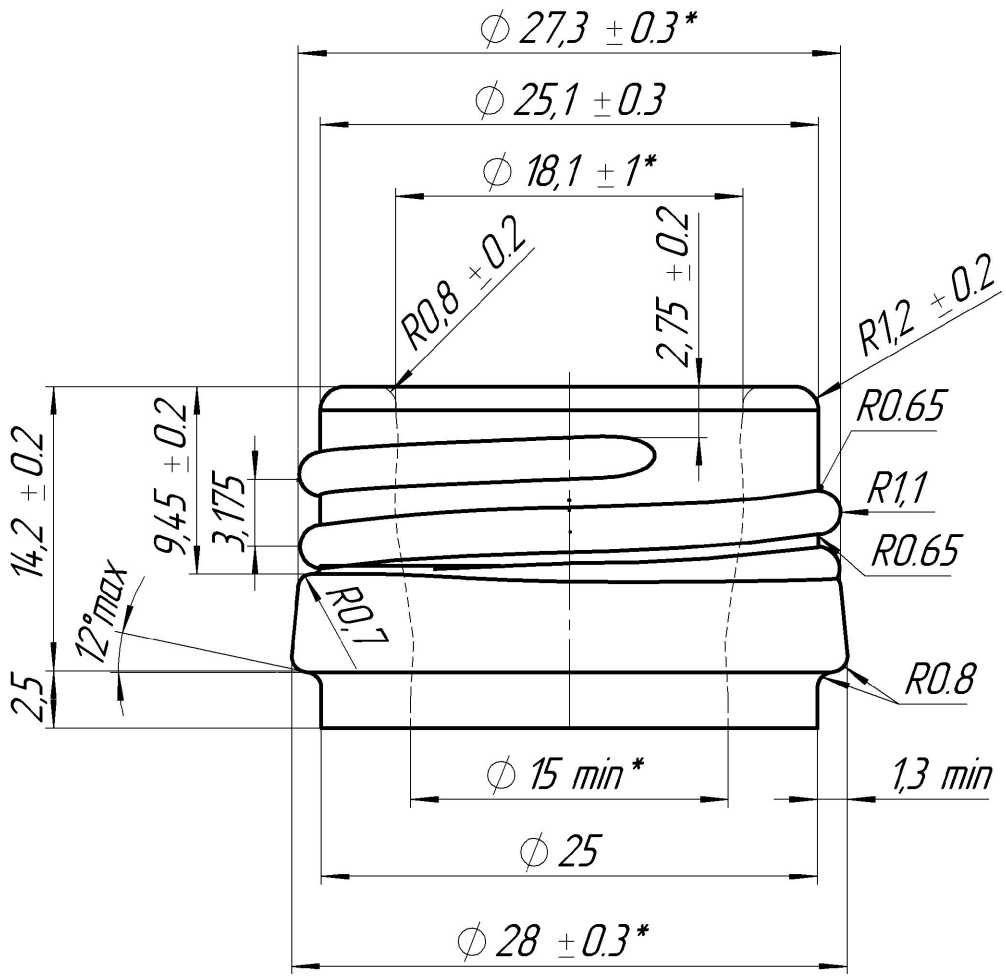

ROUND JUICE 1000ml MCA28

Height (mm)	272,5	Filing capacity (ml)	1000	Reference
Diameter (mm)	84,1	Brimfull capacity (ml)	1040	010070
Finish	MCA28	Colors		
Weight (gr.)	430	Flint ☐ Amber ☐ Green ☐ Olive ☐		

AGE OF GLASS