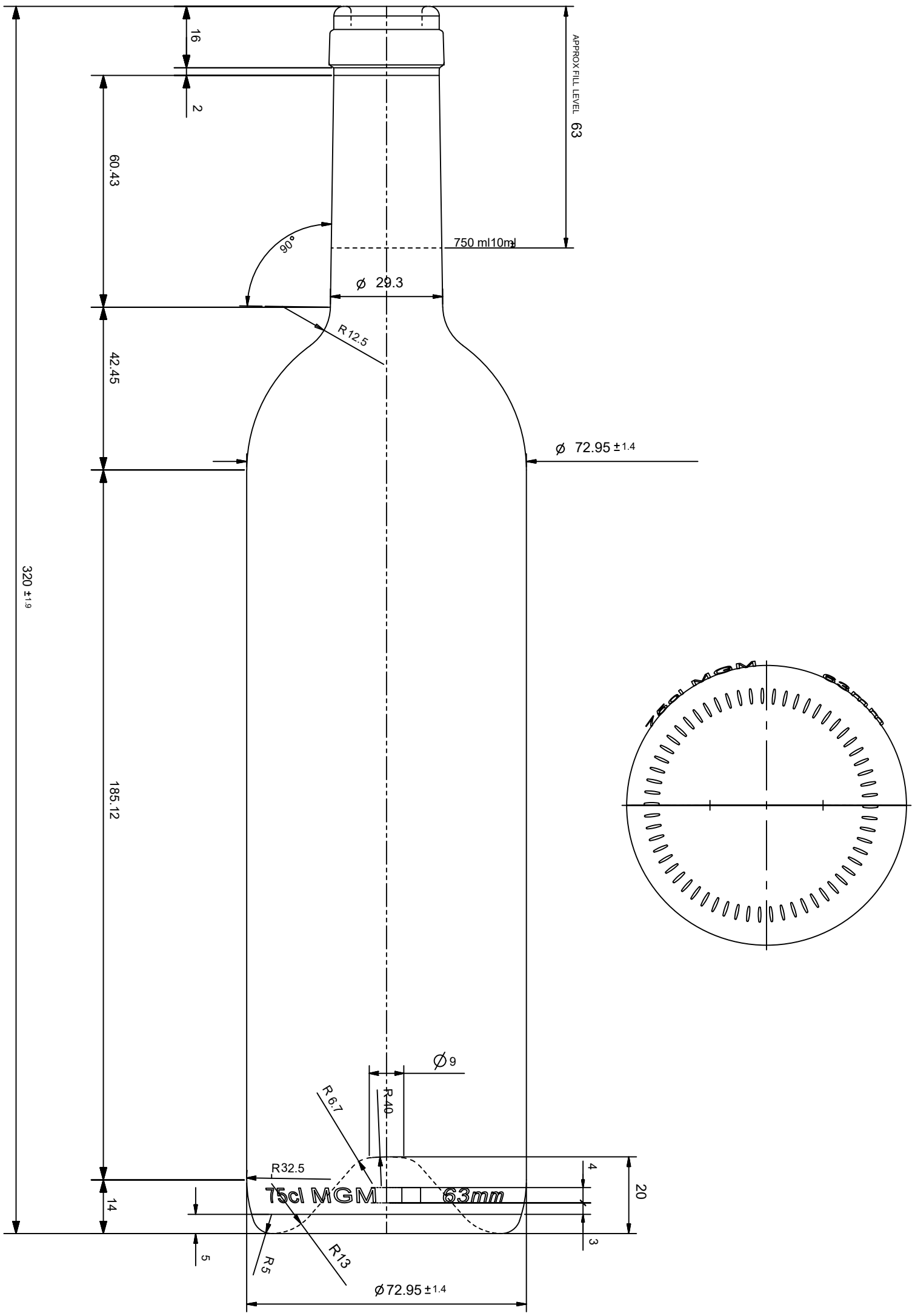

BORDEAUX GEM 750ml NOBILE CORK

Height (mm)	320,0	Filing capacity (ml)	750	Reference
Diameter (mm)	73,0	Brimfull capacity (ml)	770	010057
Finish	CORK	Colors		
Weight (gr.)	510	Flint ☒ Amber ☐ Green ☒ Olive ☐		

AGE OF GLASS