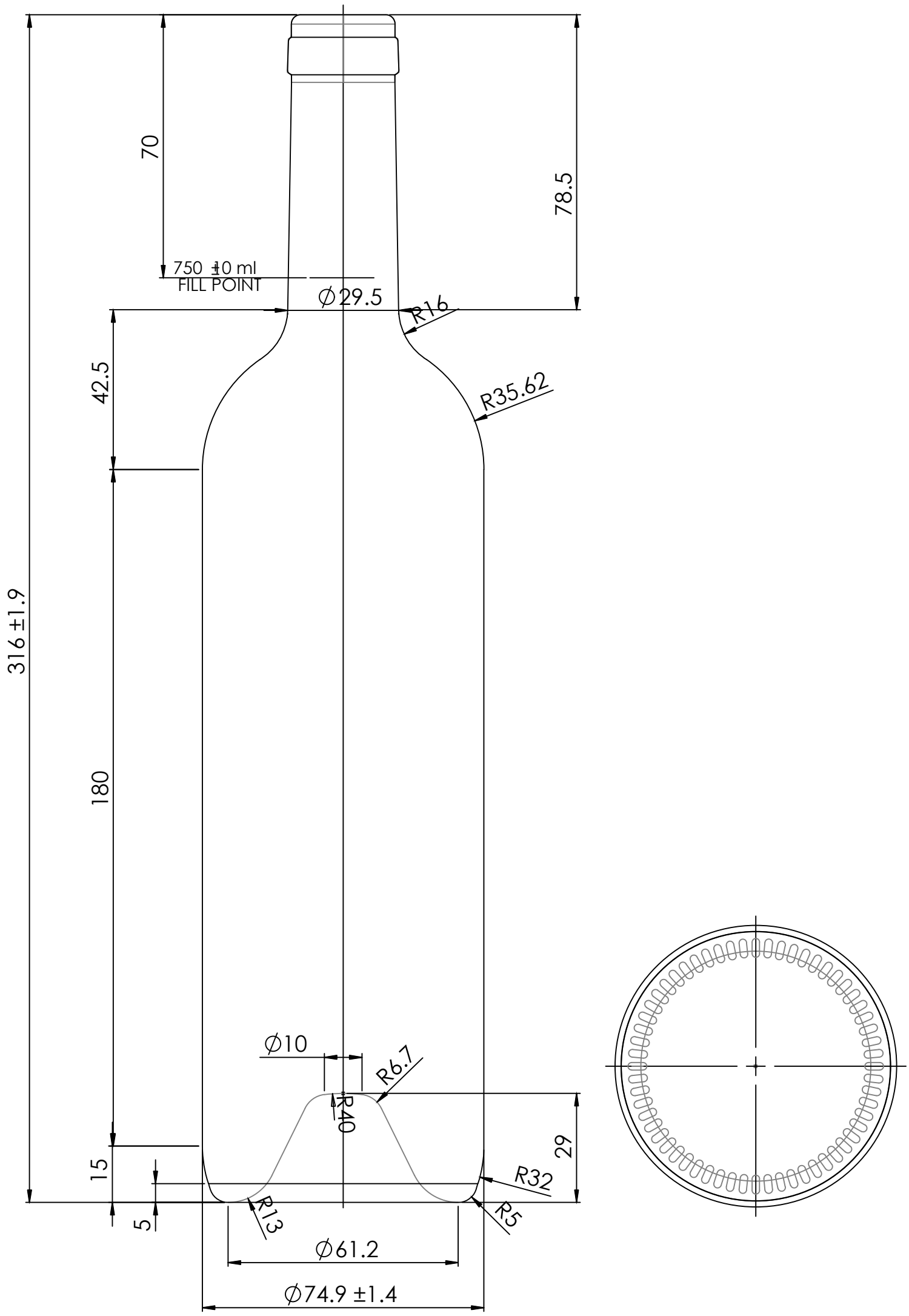

BORDEAUX EUROPEA GEM 750ml CORK

Height (mm)	316,0	Filing capacity (ml)	750	Reference
Diameter (mm)	74,9	Brimfull capacity (ml)	770	010055
Finish	CORK	Colors		
Weight (gr.)	560	Flint ☒ Amber ☐ Green ☒ Olive ☐		

AGE OF GLASS