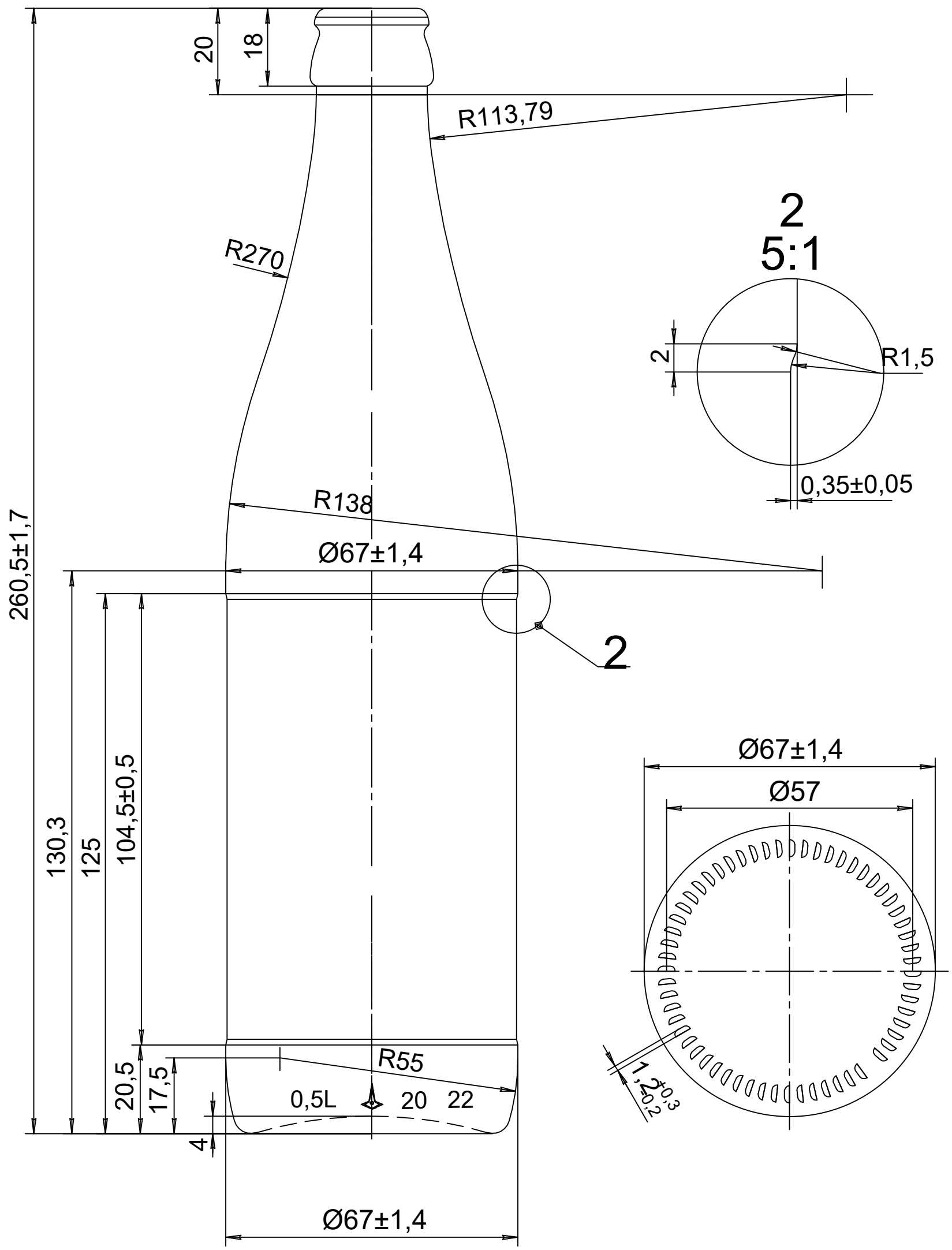

NRW LIGHT 500ml CROWN

Height (mm)	260,5	Filing capacity (ml)	500	Reference
Diameter (mm)	67,0	Brimfull capacity (ml)	520	010048
Finish	CROWN	Colors		
Weight (gr.)	305	Flint ☐ Amber ☒ Green ☒ Olive ☐		

AGE OF GLASS